Subject: Import Tank
Posted by afire on Wed, 08 Sep 2021 18:01:23 GMT
View Forum Message <> Reply to Message

A new addition today. I'd like to give it a name, but I'm coming up with bupkes. I've checked the Master Book, 1927 Stock Record Book, and the 1920s advertisements thread to no avail.

All I can say is that it runs a cal. 98, has a June 8, 1926, inscription, and a 14k green gold Swiss case with a four-digit serial number of 7979. And the presumably original B&N buckle has no patent date, rather patent pending. It would presumably have been a Strap model, because I don't think the Import designation existed this early. But it might also predate the Strap designation. Tough to say exactly what was going on in the early 1920s (and the inscription gives the latest possible date, but I'm open to the possibility that it was actually made a few years earlier). Here are a couple of pics:

And if you think the case and buckle look like they're tinted blue and purple, they are. All I know is that the previous owner stored his watches in felt-lined leather binders, and all the green watches developed this patina. I'm bummed that it'll probably fade with use, but enjoying the look for now.

I'm not sure anybody's going to find anything on it, but if anybody has a cache of mid-1920s ads that haven't been posted, let me know if you find anything. If nothing turns up, I'll do an entry in the 1920s database. I'd prefer to have an ID first, but not holding my breath on this one.

Subject: Re: Circa 1926 Swiss-Cased 14k Green Men's Tank
Posted by Jenneke on Wed, 08 Sep 2021 18:11:05 GMT
View Forum Message <> Reply to Message

Looks prestine! And a very nice patina on that gold. Just store it the same way? Or find out what kind of chemical reaction this is. What makes green gold greenish?

Subject: Re: Circa 1926 Swiss-Cased 14k Green Men's Tank
Posted by Gary on Wed, 08 Sep 2021 19:14:29 GMT
View Forum Message <> Reply to Message

Nice tank especially without the seconds wheel/second hand, always relaxing not having a seconds status. Manny of my 30's era gents cartouches are like this and are my favorite to wear.

Funny I do think felt causes this but cannot be certain. Only my GF Trooper has this nice patina, I'd say what was mixed with the gold is probably doing it.

Subject: Re: Circa 1926 Swiss-Cased 14k Green Men's Tank
Posted by afire on Wed, 08 Sep 2021 19:56:11 GMT
View Forum Message <> Reply to Message

That would make sense, now that I think of it. I've seen that watch before, and IIRC, it only happens on gold over sterling. 14k Green typically has silver making up nearly all of the non-gold content. So this purple and pink patina is presumably the interaction of silver and gold.

Subject: Re: Circa 1926 Swiss-Cased 14k Green Men's Tank
Posted by Barney Green on Wed, 08 Sep 2021 21:05:13 GMT
View Forum Message <> Reply to Message

Looks like an Imperial Tank to me, what about Tank 14?

Subject: Re: Circa 1926 Swiss-Cased 14k Green Men's Tank
Posted by Ephemerald on Thu, 09 Sep 2021 03:11:43 GMT
View Forum Message <> Reply to Message

It's very nice. I believe that Gary and Bernd are correct that this is a Tank. And that would fit your date of your inscription in line w the Tank and Imperial releases. The Imperial Tank went on sale to the general public approximately June 1927. Perhaps this is an early Imperial Tank. I have definitely seen those hands before on an Imperial but usually accompanied by an enamel dial. Do you know the case maker? Gruen billed the Imperial Tank as "the manliest strap watch ever made."

Subject: Re: Circa 1926 Swiss-Cased 14k Green Men's Tank
Posted by afire on Thu, 09 Sep 2021 03:46:19 GMT
View Forum Message <> Reply to Message

Barney Green wrote on Wed, 08 September 2021 16:05Looks like an Imperial Tank to me, what about Tank 14?
It’s definitely not a Tank (though the size is large, comparable to an Imperial Tank). Those cases were all Cincinnati-made, stamped under the Bieser patent with hollow lugs. This one has a Swiss case with more traditional construction. Strap 23 was my initial guess, but upon receiving it, the lugs are more angular, so not a match. And the patent pending B&N buckle is making me think that it is earlier than 1926. I checked a couple of other B&N buckles I have, and they’re all showing a February 1925 patent date, so I’m thinking this watch is earlier but sold in 1926. Which might mean it could predate the Master Book, in which case the only hope for an ID would be an early 1920s ad.

Subject: Re: Circa 1926 Swiss-Cased 14k Green Men's Tank

Posted by Ephemerald on Thu, 09 Sep 2021 04:55:41 GMT
View Forum Message <> Reply to Message

There are known Swiss made Tank cases, so not all of them were coming out of Cincinnatti. One example: Huguenin brothers Tank cases. Anyway, I trust your eyes that are on the speciman when you say it's not a Tank. I will look into some 20's ads to see what I can find.

Subject: Re: Circa 1926 Swiss-Cased 14k Green Men's Tank
Posted by Gary on Thu, 09 Sep 2021 13:35:03 GMT
View Forum Message <> Reply to Message

How does the back come off, not like a tank I'm guessing? Looking though the ads here I'm getting the vibes that this could be a gents cartouche, given no second hand and the slim look. The 98 9-3/4 ligne was put in ladies watches to boot, I have several.

Gents cartouche is my hunch!

Subject: Re: Circa 1926 Swiss-Cased 14k Green Men's Tank
Posted by afire on Thu, 09 Sep 2021 16:37:03 GMT
View Forum Message <> Reply to Message

Ephemerald wrote on Wed, 08 September 2021 23:55There are known Swiss made Tank cases, so not all of them were coming out of Cincinnatti.
I'm referring specifically to the models Gruen officially designated as "Tank", not rectangular watches in general. I.e., Tanks 1-28, all of which have Cincinnati cases.

Subject: Re: Circa 1926 Swiss-Cased 14k Green Men's Tank
Posted by afire on Thu, 09 Sep 2021 17:10:59 GMT
View Forum Message <> Reply to Message

GaryM wrote on Thu, 09 September 2021 08:35How does the back come off, not like a tank I'm guessing?
Standard hingeless snap-back construction.

One of the defining characteristics of a Tank model is the patented construction where the bezel and back are stamped from a single piece of metal, and the lugs are part of both the top and the back, not one or the other.

GaryM wrote on Thu, 09 September 2021 08:35Looking though the ads here I'm getting the vibes that this could be a gents cartouche, given no second hand and the slim look.

Definitely not a Mantouche, with a round movement (and no seconds because the 98 is a Lepine caliber). I know they cheated on that distinction and designated a few ladies' watches with round movements as Cartouches, but the only men's watches I've ever seen referred to as a Cartouche in advertising would be those early 1920s models with the big 16j calibers.

The only ghost of my collections past that kind of reminds me of this one was a Swiss cased sterling tank (lower case "t") with a cal. 127. I believe this sterling one predates the Master Book, which kind of makes me think the 14k green one may as well.

Subject: Re: Circa 1926 Swiss-Cased 14k Green Men's Tank
Posted by Jenneke on Thu, 09 Sep 2021 20:16:25 GMT
View Forum Message <> Reply to Message

Maybe family from this one in a 1925 advertisement?

https://www.hifi-archiv.info/Uhren-Werbung/Gruen/Gruen%20192 5%2011.jpg

---

Subject: Re: Circa 1926 Swiss-Cased 14k Green Men's Tank
Posted by afire on Thu, 09 Sep 2021 20:44:50 GMT
View Forum Message <> Reply to Message

I think more than family. I'd call it a match. Well done! The case appears identical, right down to the shape of the crown. 14k green is an option. The lack of seconds hand and Precision grade make the cal. 98 a likely movement. The only obvious difference to me is the dial, but it was not unusual for Gruen to offer the same model with both radium and gold figure options. So, I will say that I have myself a model 1670.

But...

1670, of what? The four other watches shown use the same numbering system, but are also known entries in the Master Book as Strap or Tank models. And these (there are a couple of similar pages in this database) don't really look like ads. More like fragments of either a 1925 catalog or similar flyer/supplement.

Are these numbers familiar to anybody, such that it could provide some context?

Subject: Re: Circa 1926 Swiss-Cased 14k Green Men's Tank
Posted by JackW on Thu, 09 Sep 2021 21:56:09 GMT
View Forum Message <> Reply to Message

Jenneke wrote on Thu, 09 September 2021 14:16Maybe family from this one in a 1925 advertisement?

https://www.hifi-archiv.info/Uhren-Werbung/Gruen/Gruen%20192 5%2011.jpg
WOW! That is a phenomenal find.

Subject: Re: Circa 1926 Swiss-Cased 14k Green Men's Tank
Posted by Case on Fri, 10 Sep 2021 01:39:56 GMT
View Forum Message <> Reply to Message

Wow, Jenneke, great find! I was actually going to propose earlier, like 1923. But the source (ad?) & engraving are so close in time. Very cool!

It's a stunning watch! A few thoughts:
This is a caliber 997, which was always stamped 98. I was going with 1923 model because it isn't in the master book, but it does have 1922 stamps. 1920-21 997s are all "4 adjusts." Never seen a 1922 stamps one with anything but "temp." But that's not much to go on without seeing the movement number behind the dial. Would match 1925 too.

The 1670 details a 15j version (assuming caliber 99), so yours is a higher grade. Perhaps the highest? I know some of the 997 models could be upgraded to an 18j "extra precision", at least until 1923.

I don't know the nomenclature. Perhaps an overlap from the old nomenclature? Some of the newer models in 1917 & 1918 were 4 numbers ("C1340LG")

Subject: Re: Circa 1926 Swiss-Cased 14k Green Men's Tank
Posted by Jenneke on Fri, 10 Sep 2021 06:22:37 GMT
View Forum Message <> Reply to Message

The nomenclature…. I guess the numbering is from the catalogue the pictures originate from. So, a jeweler/wholesale item number and I would say non Gruen related.

But if there is one picture, there must be more!

Subject: Re: Circa 1926 Swiss-Cased 14k Green Men's Tank
Posted by Barney Green on Fri, 10 Sep 2021 11:36:03 GMT
View Forum Message <> Reply to Message

Jennecke is correct, this is a number from the wholesaler S. Kind & Sons in Philadelphia. The pictures are an excerpt from their 1925 catalog.

Subject: Re: Circa 1926 Swiss-Cased 14k Green Men's Tank
Posted by Case on Fri, 10 Sep 2021 12:45:46 GMT
View Forum Message <> Reply to Message

Also interesting to see price for 14k green gold case was less. Could it be yellow was an import, green gold cincinnati?

Subject: Re: Circa 1926 Swiss-Cased 14k Green Men's Tank
Posted by afire on Fri, 10 Sep 2021 14:58:44 GMT
View Forum Message <> Reply to Message

Okay, so not a 1670. The ID hunt continues, though I can certainly accept that it may never materialize.
Jenneke wrote on Fri, 10 September 2021 01:22But if there is one picture, there must be more!
I was thinking along the same lines, and hopefully that's true. But looking at those pictures, they are photographs of the watches, and not really consistent with any Gruen photography I'm familiar with. For example, Gruen was consistent about photographing and illustrating watches at 8:20. These are all set to around 9:23. My guess would be that these are photographs taken by S. Kind & Sons (thanks Barney!) of their actual stock.

Case wrote on Fri, 10 September 2021 07:45Also interesting to see price for 14k green gold case was less. Could it be yellow was an import, green gold cincinnati?
I've noticed that on a number of watches, generally not later than the mid-1920s. After that, the prices mostly seem to be equal. And it's not about origin. You can see it for models that clearly had the same case maker (in fact, I don't think there are any models, at least that I'm aware of, that used more than one case maker). My guess is that it has something to do with the contents of the alloy. Maybe a higher palladium content in earlier white gold?

Also, thanks for the thoughts on the movement. This is the only "997" (or is it really just a 17j 98?) I have. I have one other 98, but I think it's the usual 15j version. And yesterday I was going to post the SN to see if that could narrow down the date of production. Then I realized it's under the dial. And my rule is that when I have a serviced watch with a clean dial, I'm not letting my grubby hands anywhere near it. Taking it out for pictures is the farthest I'll go.

Subject: Re: Circa 1926 Swiss-Cased 14k Green Men's Tank
Posted by Case on Fri, 10 Sep 2021 17:16:56 GMT
View Forum Message <> Reply to Message

afire wrote on Fri, 10 September 2021 10:58And my rule is that when I have a serviced watch with a clean dial, I'm not letting my grubby hands anywhere near it. Taking it out for pictures is the farthest I'll go.

Ditto to that!

So I'm getting more and more convinced your watch is indeed from 1925, but I think the model was released earlier (1922-23) which is why it's not in the Master book.

For 1925, we've got the engraving & the buckle. Your buckle was made between August 1924 and early 1925. Patent from Feb 1925.

There's also the 18j [url=https://vintagegruen.org/vgforum/index.php?t=msg&th=39&goto=15455&#msg_15455]tank[/url] with Swiss case # 7278. Gruen was advertising these 18J tank upgrades in 1923, so your 7979 would be after that.

Finally, there's the Kind catalog image. I've seen these Kind catalogs, but I've never tried to pin down firm dates for them (there are no dates listed in the actual catalogs). Dates listed for them appear to be guesses.

Here's a crack at it:
-"1924" catalog: Has multiple named Quadrons, including Quadron 1 with the Ben Hur band, and elsewhere has several Sesquicentennial items--so I think it is actually from 1926. This is evidence that Kind was up to date with their models: 1926 new Gruen models shown in 1926 catalog.
-"1920" Catalog: Has a Pentagon that I think may pre-date the Master Book, and it shows DGS watches--I think it is actually more like 1921-22.
-"1925" Catalog: The catalog Jenneke's image came from still advertises 25-year cases, plus several 1921-23 Gruen & Longines watches. It does have a Pentagon in it that I think is perhaps in the master book but no reference to it or the Tank being patented. The biggest clue is, there is now a reference to "reinforced gold" listed as a case option. Gruen introduced "reinforced" with the Tank, first nationally advertised "reinforced gold" in June 1923 (see first ad in 1920s section) but all lines had reinforced options advertised in 1923. I would say the catalog is 1923-24. But fair warning: it also has a Gruen platinum cartouche that is a dead-on match to Master Book model 3G107. Caliber 107. So who knows!

File Attachments

1) US1525424-buckle clasp niles detail.png, downloaded 2461 times

Feb. 3. 1925.

BU

File

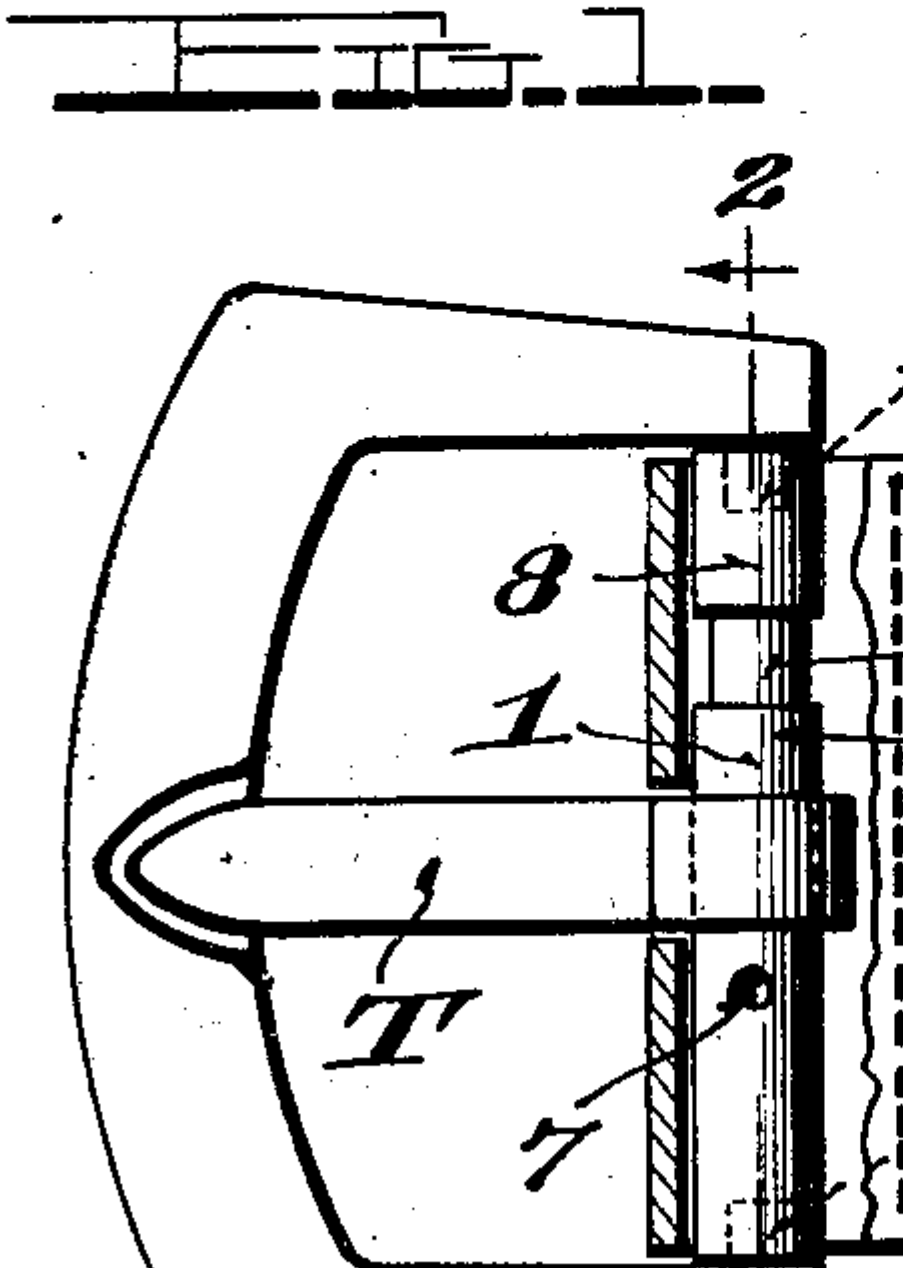

Subject: Re: Circa 1926 Swiss-Cased 14k Green Men's Tank
Posted by Case on Fri, 10 Sep 2021 17:50:53 GMT
View Forum Message <> Reply to Message

afire wrote on Fri, 10 September 2021 10:58This is the only "997" (or is it really just a 17j 98?) I have.
That's really all the 997 is, in my eyes. I see a capped escape wheel, maybe Alex or others know if there's anything more technically different.

And I still do not know which (if any) of my 15J ones are actually caliber 98 vs. 99--they're all marked 98, if marked at all.

Wait--I think I just found a visual difference! I believe I do actually have at least one, true caliber 98.

Subject: Re: Circa 1926 Swiss-Cased 14k Green Men's Tank
Posted by afire on Wed, 29 Sep 2021 14:49:39 GMT
View Forum Message <> Reply to Message

I got the movement serial number from Bryan. Evidently, I didn't notice but it was on my invoice (which I promptly threw away), but he kept a copy. It's 94508. Does that mean anything to anybody?

Subject: Re: Circa 1926 Swiss-Cased 14k Green Men's Tank
Posted by Case on Thu, 30 Sep 2021 16:28:31 GMT
View Forum Message <> Reply to Message

Yes. The movement sn, movement markings, and case # all point to 1923. The watch came over as a complete unit early in 1923 is my bet. By 1924, the "98" stamp had also moved to the other side, next to the winding wheel.

Subject: Re: Circa 1926 Swiss-Cased 14k Green Men's Tank
Posted by afire on Thu, 30 Sep 2021 17:17:51 GMT
View Forum Message <> Reply to Message

Excellent! That reinforces my hunch that this was a pre-Master Book model. I will be making an entry in the model database now.